Measuring Planck's Constant using the Photoelectric Effect

Objectives

In this lab, you will measure Planck's constant by capitalizing on how the photoelectric effect allows us to link electron kinetic energy with a readily measurable quantity: the wavelength of light. You will measure how a voltage bias affects the kinetic energies of electrons to extract Planck's constant from a linear fit. You will also analyze results using a standard deviation of the mean (SDOM) analysis.

One of the purposes of this lab is to give you the opportunity to think more deeply about uncertainty. In this lab, our measurement of wavelength has significant implications for your analysis but does not have a straightforward propagation method.

Background

Before you come into the lab, you should review key concepts and principles on the function and theory of the photoelectric effect. Your modern physics (PHYS 211) textbook will contain a discussion of the photoelectric effect. Regardless of your source(s), you should have a decent understanding of the following ideas.

Electromagnetic radiation is quantized. A quanta of electromagnetic radiation is a *photon*, with an energy determined by its frequency, f, and Planck's constant, h. That is,

$$E_{\text{photon}} = hf \qquad \text{Eqn. 1}$$

Planck's constant is a fundamental physical constant. When a photon of energy hf strikes a metal, the photon transfers its entire energy to a single electron.

Electrons in metals occupy energies up to a maximum called the Fermi energy. The Fermi energy is negative relative to a free electron, indicating that the electrons are bound inside the metal and not free to flow out into space. This energy difference, shown in Fig. 1, is called the **work function**, W, of the metal. This is the energy you must give to an electron at the Fermi level to kick it out of the metal and turn it into a free election. If the photon energy exceeds the binding energy of the electron in the metal (i.e. the 'work function'), W, the electron will be ejected from the metal.

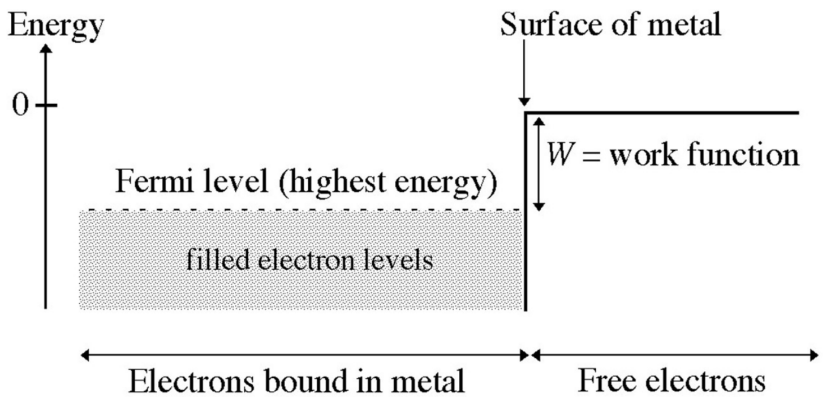

Figure 1. The work function W is the minimum energy needed to remove an electron from a metal.

The maximum kinetic energy ($KE_{\max}$) of an ejected electron can be found, using conservation of energy:

$$KE_{\max} = hf - W \qquad \text{Eqn. 2}$$

In this experiment, photoelectrons are produced by an LED source, which we shine on a photocell. The photocell, shown below in Figure 1, is a diode. Light is incident on a low-work-function cathode. Photoelectrons move through vacuum to the anode, then through a picoammeter where the current is measured.

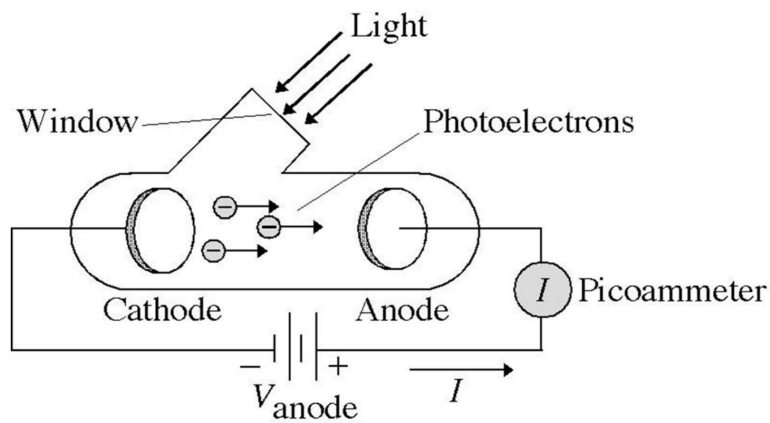

Figure 2. Schematic diagram of the inside of the photoelectric apparatus. The incident light comes from an LED source, and the bias, V_{anode}, at which the current stops is the stopping voltage.

The electron's maximum kinetic energy can be measured electrically. If the anode is biased negatively with respect to the cathode, the electrons will be slowed as they approach the anode. If the anode is biased negatively with respect to the cathode, the electrons will be slowed as they approach the anode. Photoelectrons that had too little kinetic energy leaving the cathode will be turned back. The current will decrease as the bias voltage V_{anode} becomes more negative until there comes a stopping voltage, $-V_S$, at which the current reaches zero. This is the voltage that

stops the most energetic photoelectrons, those with kinetic energy KE_{max}. When this point is reached, we can equate KE_{max} to eV_S. V_S is called the **stopping voltage** and is positive.

Note: We've defined V_S as a positive number. The anode voltage, relative to the cathode, is $V_{anode} = -V_S$.

Equation 2 above can now be written as Equation 3:

$$eV_s = hf - W \qquad \text{Eqn. 3}$$

Note, you do not directly measure the frequency, f, in this lab; but you will measure the wavelength, λ. Consider rewriting Eqn. 3 in terms of wavelength to assist with the analysis. Also, you cannot measure Was an energy in Joules but can extract it from a linear fit.

This experiment is a little tricky in that there are a few experimental considerations you will have to keep in mind. For example, you might find that the peak wavelength of each LED works better than the highest energy photon from the same LED. You might want to take some time to think through how that will affect your data analysis.

Equipment

Your light sources are LEDs with various wavelengths. The emission spectrum of an LED shows us that it is not perfectly monochromatic: the full width at half-maximum (FWHM) may be around 20 nm. Strictly monochromatic light would look like a delta function. The approximately 20 nm FWHM has some ramifications, which you should think about and discuss. Use the USB Spectrometer to measure all wavelengths of the LED source(s). The wavelengths labeled on the LED source are only *approximate*. NOTE: There are optical filters available to narrow the spectral lines from the LEDs.

The photocurrent will be measured with a picoammeter, as the photocurrents are **very** small.

Lab description

Important note:

Set the picoammeter on the highest current (least sensitive) scale before turning it on or before making any electrical changes anywhere in the experiment. Allow it to stabilize before taking serious measurements. Check the zero of the picoammeter when **no** light is falling on the photocell. You can do this by placing your finger over the photocell opening. Also, measure the background current due to any ambient light. NOTE: When first turned on, the ammeter might indicate that "zero check" (ZC) is on, press "ZCHK" until the indicator just reads "nA".

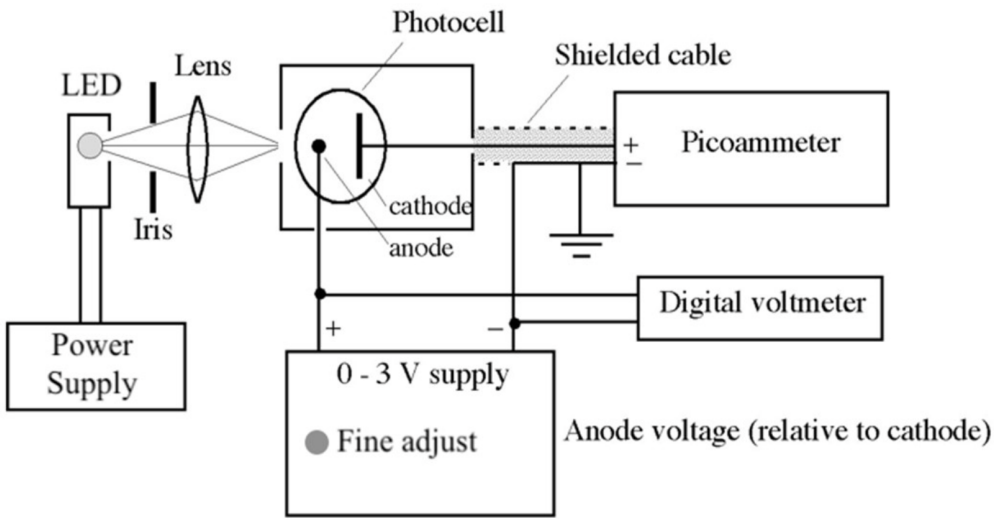

Figure 3. Schematic diagram of experimental apparatus as set out. Note that the fine adjustment on the power supply is a single knob.

Consider Eqn. 3. Determine your dependent and independent variables, and how a linear fit will allow you to measure Planck's constant and the effective work function of the cathode.

Before starting any measurements, **observe the other wavelengths available on the LED source.** Determine how many you will characterize before beginning.

Like before, you must obtain a good emission spectrum of the wavelength. The LED source has been aligned along an optical line toward the photocell. We recommend you do not change this optical line. Instead, use the optical equipment available to position the Ocean Optics spectrometer *near* the LED source. When you open the spectroscopy software (Ocean View), you will be able to see a "live" view of what the spectrometer sees. Make sure the signal is not saturated (*i.e.,* flat on top). A good spectrum is one where you can see the full, normal distribution of the LED source. **Once you have a quality spectrum, we recommend you record data for the central wavelength and the FWHM.**

Now that you have the wavelength data (your x values), shine the LED light source onto the photocell. **Predict if the voltage you will see on the voltmeter will be positive, negative, or zero. You can bias the anode either positive or negative relative to the cathode simply by switching the leads coming from the voltage supply.**

With the bias voltage at zero, adjust the iris to give a current of a few nA. With the light intensity fixed, measure the current-voltage curve between $V_{\text{anode}} = -3$ V and $V_{\text{anode}} = +3$ V. (Note: Positive voltages make the current increase, negative voltages make it decrease.) **Your report should explain why the curve has this shape.**

Slowly increase the anode voltage, while observing your current. You should be able to get down to thousandths of a picoamp. Take note if the picoammeter reads "nA" in the lower right-hand corner of the digital screen. If it still reads microA (μA), you will not get precise enough values for your stopping voltage. **Stop and consider why this is the case. Your instructor will ask you about it.**

When you are convinced you have reached "zero" current, record the value of the anode voltage—this is your stopping voltage for this wavelength. These are your y values. We recommend you start plotting your data as soon as possible to visually inspect the emerging linear model for any potential mistakes or gaps in your data. Note: it may be tricky to determine where exactly this "zero current" point arises! We recommend several iterations of the same measurement.

Repeat these steps until you have a good linear fit. "Goodness" of the fit should be evaluated by how accurate and precise your value of h is, and how large your uncertainties are. Make sure you normalize the light intensity for each wavelength: set $V_{\text{anode}} = 0$ V and adjust the iris to get the same current as with the first wavelength. (Why is this important?) Also note, your experiment should be based on very low current measurements and is thus susceptible to background photons, the photocell's dark current, and more.

Finally, make measurements to determine the effect of the light intensity (by adjusting the iris) on the stopping voltage. You can use the photocurrent when $V_{\text{anode}} = 0$ V as a measure of the relative light intensity.

Results and Analysis (What to include in your lab report)

1. **Characterizing the experiment**
   a) Include a plot of your current-voltage curve at 570 nm, from -3 to 3 V. In three to four sentences, explain why it has the observed shape.
   b) Briefly describe your data collection procedure. Report the following parameters in a table: central LED wavelength (include at least one screenshot from the spectrometer), FWHM (in nm), V_s.
2. **Calculate Planck's constant, *h*: Fit linear plot to your data**
   a) Fit your data to a line with the form $y = mx + b$ *and* find m. Use a 68% confidence interval. Show a plot with your data points and the linear fit. Make sure to include error bars, plot title, axis labels, units, etc. from the Formatting Guidelines. Also include the fitted equation.
   b) Report your result as $(\text{xx} \pm \text{xx}) \times 10^{-34}$ J·s. Quantitatively compare your calculated value to the accepted value.
3. **Determine the effective work function, W**
   a) Report the effective work function, W, of the cathode, in eV.

b) Discuss what makes the work function determined here the *effective* work function and not the *actual* work function. You should think back to your reading on how electrons are ejected from metal in the context of the photoelectric effect.

4. **Calculate Planck's constant, *h*: SDOM analysis**
   a) As before, calculate *h* using individual data points. Then take the mean and the standard deviation of the mean. Use the linear fit intercept to provide a value for the effective work function.
   b) Report your result as (xx ± xx) × 10^{-34} J·s. Compare your calculated value to the accepted value.
   c) Provide an SDOM plot and compare your results from 2.A and 2.B.
5. **Explain the dependence of the Work Function on the intensity of light**
   a) Briefly describe your data collection procedure and your results
   b) Discuss the expected results of changing the light intensity based on a classical model of light waves, and contrast that to the photon model to explain your results.